#1

State Well Report
Part 1 – Driller's Log

Mississippi Department of Environmental Quality
Office of Land and Water Resources
P.O. Box 10631
Jackson, MS 39289-0631
(601)961-5210
(601)354-6938 (fax)

County: Wayne
Permit #: e 0205
Driller: GILBERT CARR
Date drilling completed: ~~9-6-12~~ 8-24-12

For Office Use Only:
Aquifer:
Well #: T97
L. S. Elevation:
E-log #:

State Law requires that this report be prepared by the license holder responsible for the work and filed with the Department at the above address within 30 days of completion of drilling of the well or borehole.

Information on Well Owner
(Information if borehole is not for a water well)

Owner Name: James Mills & MICHAL KNIGHT
Mailing Address: 1260 CHICORA RV. RD.
WAYNESBORO MS 39367
City State Zip Code
Telephone No: (601) 412 0205

Well or Borehole Location

Latitude: 31 • 34 • 265 (45) Longitude: 088 • 35 • ~~329~~ (13)
Method of Lat/Long (circle one): Conventional Survey, USGS quad, Hand-held GPS, Survey-grade GPS
NW ¼ NW ¼ Sec 15 Twn 7N Rng 6W
Distance 12 Miles Direction SOUTH of WAYNESBORO (Nearest Town)

Well / Borehole Data

Date drilling started: 8-20 Date drilling completed: 8-24 Hole depth: 171' Hole diameter: 4"
Location of the source of any surface water used for drilling: 108 COPELAND RD. BUCKATUNNA
Method of cooling and volume of Chlorine used in drilling and development: 10 OZ HTH FOR 2500 GALLATON
Logs run (circle all applicable): Mechanical Electric Gamma Ray Density Sonic Neutron Other:
Name of organization running log(s):
Purpose of borehole (check one): Water Well X Geotechnical/Geological Investigation___ Ground Source Heat Pump___
Seismic Survey___ Other (describe)
If drilling is not related to water well construction, skip the remainder of this block

Purpose of Well (check one): Home Industrial Public Supply Irrigation Fish Culture Other:
If a flowing well, method of flow regulation: Valve _____ Other (describe)
Static Water Level: 86' feet above or below (circle one) land surface Date measured: 9-6-12
Method of Measurement (circle one): steel tape electric tape air line other:
Well depth: 171' Well grouted to a depth of 20' feet Type of grout (circle one): Neat Cement Bentonite Mix
Casing length: 151' feet Casing diameter: 4" inches Type of casing: PVC
Screen length: 20' feet Screen diameter: 4" inches Type of screen: PVC
Screen slot size: e 10 inches Setting depth: From 151 feet to 171 feet
Type of completion (circle all applicable): Gravel packed Underreamed Telescoped Open hole Natural Development
Other (describe): SAND PACK
Top of lap pipe or reduction in casing: _____ feet. *If telescoped or more than one screen, describe on next page*

Form: OLWR-SWR-1A

RECEIVED
OCT 2 2 2012
BY: OLWR

T97

The sketch below only required for water wells

If well telescopes, show depths on sketch.

Ground Level

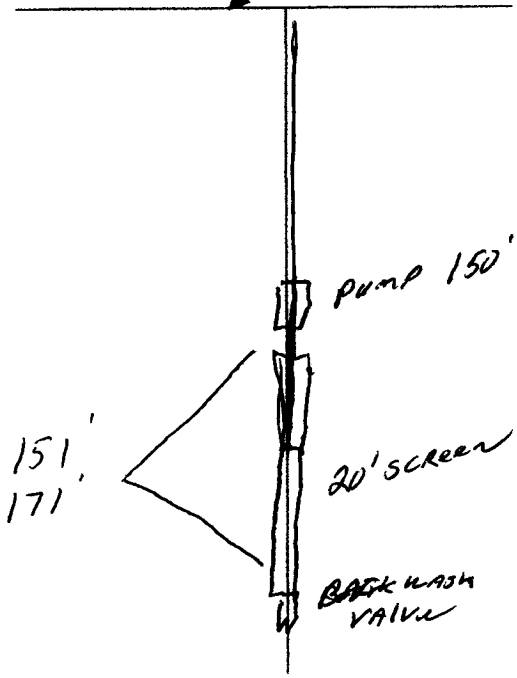

If more than one screen, show location of each on sketch

Description of formations encountered must be provided for all wells and boreholes, unless specifically exempted by regulations

Description of Formations Encountered	From (depth) Ground Level	To (depth)
TOP SOIL	0	1
RED SAND	1	5
Yellow / GRAY CLAY	5	12
GRAY CLAY	12	29
WHITE MED SAND	29	35
RED Fine SAND	35	40
RED MED SAND	40	45
RED Fine SAND	45	60
WHITE CLAY	60	70
WHITE Fine SAND	70	84
Yellow CLAY	84	116
SAND / CLAY	116	145
Fine SAND	145	150
MED. SAND	150	155
Fine SAND	155	160
Fine / MED SAND	160	165
MED / COR SAND	165	171

Sketch the property layout and include the following: 1) the well location; 2) any permanent structures on the property that may aid in locating the well; 3) any roads, power lines, or other items that may aid in locating the property and the well; 4) a north arrow.

63 SOUTH 3 mile's TO CHICORA RV. RD.
GO ABOUT 5 miles GO BY Blue BERRY FARM WITH
windmill's GO 1/4 Blueberry Feild on LT

Landowner Name: MICHAL KNIGHT

Form: OLWR-SWR-1A

I certify that the well/borehole was drilled, constructed, and completed in accordance with all applicable requirements of the Mississippi Department of Environmental Quality and the Mississippi Department of Health regulations, if applicable, and state laws.

GILBERT CARR 9-18-12 Gilbert Carr

Print Name of Responsible Licensee and License No. **Date** **Signature of Responsible Licensee**

RECEIVED
OCT 22 2012
BY: OLWR

RECEIVED
2012
BY: OLWR

STATE WELL REPORT

Part 2

Pump Installer's Completion Report
Mississippi Department of Environmental Quality
Office of Land and Water Resources
P.O. Box 10631
Jackson, MS 39289-0631
(601)961-5210
(601)354-6938 (fax)

County: Wayne
Permit #: 0205
Driller: GILBERT CARR
Date completed: 9-18-12
9-18-12
Copy information from block on Part 1

For Office Use Only:
Aquifer:
Well #: T97
Elevation:

This part of the report must be completed by a licensed water well contractor or a licensed pump installer. A copy of Part 1 of the report must be attached and both parts filed with the Department at the above address within 30 days of well completion.

Well Owner Information

Owner Name: JAMES MILLS & MICHAL KNIGHT
Mailing Address:
WAYNESBORO MS 39367
City State Zip Code
Telephone No. (601) 410-0208

Well Location

Latitude: 31-34-765 Longitude: 088-35-229
Method of Lat/Long (check one): Conventional Survey____, USGS quad____, Hand-held GPS ✓, Survey-grade GPS____
NW ¼ NW ¼ Sec 15 T 7N R 6W
Distance Direction Nearest Town
____Miles ____ of ____

Pump Type
Circle one

Air Lift | Jet | (Submersible) | Bucket | Piston | Turbine | Centrifugal | Rotary | Flowing Well
Other (specify):
Date Pump Installed: 9-18-12
Rated Pump Capacity: 50 Gallons Per Minute

Power Type
Circle one

Diesel Engine | Gasoline Engine | Natural Gas | Electric Motor | Hand | Tractor PTO | Windmill | Other (specify):
Horse Power Rating of Motor: 5 HP
Setting Depth: 150' feet
Number of Stages: 11

Pump Test Data

Date Well Tested: 9-18-12
Static Water Level (A): 86 Feet Below Land Surface
Pumping Water Level (B): 150' Feet Below Land Surface
Drawdown [(B) - (A)]: 64 Feet Below Land Surface
Test Pumping Rate: 70 Gallons Per Minute
Duration of Pump Test (minimum 4 hours): 4 1/4 hours

Method of Measuring Water Level
Circle one

Air Line | Electric Measuring Line | (Steel Tape)
Other (specify):
For flowing well, measured shut in head: ____feet
Well yielded 70 GPM with a drawdown of 3 feet after 6 hours of pumping

I HEREBY CERTIFY that the above statements are true to the best of my knowledge.

GILBERT CARR
Print Name of Pump Installer and License No. (if applicable)

Gilbert Carr
Signature of Pump Installer

Form: OLWR-SWR-1B

RECEIVED
OCT 22 2012
BY: OLWR